@ansell_lighting
anselllighting
Ansell Lighting
ansell_lighting

Prism Pro Fire Rated

Category	Downlights
Application	Ancillary, Hospitality, Residential, Retail
Specification	Architectural

Prism Pro CCT Fire Rated Downlight Dual Wattage

Code: APRIP/1

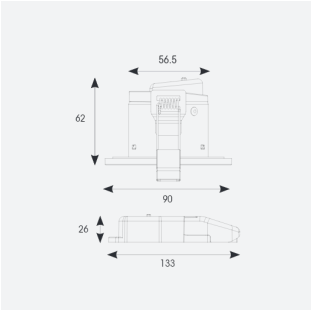

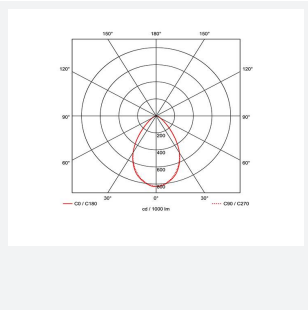

PRODUCT FEATURES

- IP65 dimmable LED Fire Rated Downlight suitable for residential and hospitality applications
- New innovative 2 part detachable connector design allows initial wiring and testing to be completed first, then simply plug the downlight back to the connector, ensuring a quick and simple installation
- Low profile design and remote driver allows installation into shallow ceiling voids
- Fully tested to meet Part C (moisture), Part E (acoustic) and Part L (energy) of Building Regulations
- CCT selectable between 2700K, 3000K, 4000K and 6000K and power selectable; offering a choice of 2 outputs, in one luminaire
- Remote driver with 2x1.5mm^2 + CPC loop-in, loop-out colour coded push fit piano terminals provide an easy and efficient installation
- Fully tested for 30, 60 and 90 minute ceiling types to meet Part B of Building Regulations
- Wide 65° beam angle for increased light distribution

GENERAL INFORMATION	
Wattage	5W - 7W
Lumens Delivered	560lm - 740lm
Lm/W	110lm/W - 105lm/W
Beam Angle	65
CRI	80
CCT	2700/3000/4000/6000K
Input	220/240V
Operating Temp	-20°C - 35°C
SDCM	6
UGR	25
Cut-Out Size	73mm
Product Weight without Packaging	0.285 kg

TECHNICAL INFORMATION	
Light Source	LED
Colour / Finish	White
Fire Rated	Yes
IP Rating	IP65
Class Protection	1
Internal / External	Internal
Surface / Recessed / Suspended	Recessed
Lumen Depreciation	L70 60,000h
Warranty (Years)	5
CE Mark	Yes
Diameter	90 mm
Height	62 mm